ATTENTION

There is a potential risk of serious injury or death associated with virtually every product regardless of its type or intended use. Stander, Inc., has worked tirelessly to minimize all risks associated with its mobility aids, yet given the types of products, users, and a myriad of things outside of our control, we cannot eliminate every conceivable risk. Accordingly, a consumer must use common sense when utilizing our products, and take into account the user's overall physical and mental health.

Read all of the materials that accompany this product before it is installed or used.

LIMITED WARRANTY

Stander, Inc. warrants to the original purchaser that this product will be free from defects in material and/or workmanship for 1 year from the date of purchase. During the warranty period we will correct any defects in material or workmanship at no charge. All shipping cost must be paid by the original purchaser. Any replacement parts will be new and are warranted for the remainder of the original warranty or thirty (30) days from the date of shipment, whichever is longer. The original purchaser must notify Stander, Inc. during the warranty period in writing of the defect in workmanship or material. This warranty is not transferable and covers only normal use. Stander will not refund or pay for any shipping charges. The warranty does NOT cover: (1) Damage during shipment other than original shipment to retailer; (2) Damage caused by unauthorized attachments, alterations, or modifications; (3) Damage caused by the use of the product for purposes other than those for which the product was designed or intended; and (4) Damage caused by any other abuse, misuse, mishandling or misapplication.

Under no circumstances shall Stander, Inc. be liable for any special, incidental, or consequential damages based upon breach of this limited warranty, breach of contract, or strict liability.

THERE ARE NO WARRANTIES WHICH EXTEND BEYOND THOSE INDICATED HEREIN. ALL OTHER WARRANTIES, EXPRESS OR IMPLIED (INCLUDING ALL IMPLIED WARRANTIES OF MERCHANTABILITY OR FITNESS FOR A PARTICULAR PURPOSE), ARE HEREBY DISCLAIMED.

Some states do not allow limitations on how long an implied warranty lasts, so the above limitation may not apply to you. This warranty gives you specific legal right, and you may also have other rights which vary from state to state. To obtain service under this warranty, you can reach Stander, Inc. at (800) 506-9901 or (435) 755-0453.

WARNINGS

1) INSTALLATION:
   a) Do not use or install this product unless you read and understand these warnings and assembly instructions to ensure the product is properly installed and used. If installer/user(s) are installing this product in a nursing home, assisted living center, or a similar facility, follow these and the facilities Bed Rail installation policies. If you have any questions regarding the installation, use, associated risks, or anything at all regarding this product call Stander Inc. at (800) 506-9901 or (435) 755-0453.
   b) Improper installation of this product significantly increases the risk of entrapment (see section on ENTRAPMENT below). Do NOT install product without a bed frame under any circumstances. Do NOT use product without Safety Strap. Do not install this product if you are unable to follow the instruction exactly.
   c) This product should only be used with 10 inch to 17 inch thick innerspring or memory foam style mattresses. This product should not be used on any bed which consists of a material that may increase the potential for gapping between the top of the mattress and the bottom of the Bed Rail. Examples of beds that will cause gapping problems include, but are not limited to waterbeds, light weight foam, air or other lightweight mattresses, mattresses that compress more than 1" on the edge when in use, and beds with adjustable frames.
   d) Prior to use, ensure that there is no gap between the side of the Bed Rail and the side of the mattress. A gap in this area means the product was installed improperly. The included Safety Strap is designed to secure the Bed Rail to the side of a mattress to avoid a gap in this area.
   e) The product is equipped with a Safety Strap that is intended to reduce the risk of entrapment (see section on ENTRAPMENT below). NEVER remove the Safety Strap or use product without these items. Removal, modification or alteration of the Safety Strap significantly increases the risk of entrapment.

2) ENTRAPMENT:
   a) There is a risk of entrapment associated with bed rails and other similar bedside mobility aids. Entrapment occurs when an individual becomes wedged between a bed rail and any other object. Entrapment has resulted in serious injury and death. Read the enclosed **Entrapment Prevention Guidelines** before installation or use of this product. Additional copies of the Entrapment Prevention Guidelines may be obtained from www.stander.com or by contacting a Stander representative at (800) 506-9901 or (435) 755-0453.

3) PHYSICAL AND MENTAL CONDITIONS:
   a) Individuals who have problems with physical limitations, paralysis, symptoms of dementia, Alzheimer's or memory loss, sleeping, incontinence, pain, uncontrolled body movement, getting out of bed and walk unsafely without assistance, frailty, weakness, confusion, restlessness, terminal restlessness, or are under the influence of medications, drugs or any substance that could impair their balance or judgment, or any other unforeseeable reasons that could affect the users physical and mental ability to safely use this product, are at a higher risk of entrapment. Since these conditions are subjective and Stander Inc. has no control who chooses to use this product, it is the installer/user(s) responsibility to consult a physician before using this product.
   b) This product is not intended to carry the full weight of an individual. This product is only intended to provide balance and support while sitting and standing.

4) EXTERNAL FACTORS:
   a) Children should not be allowed to hang on or play with this product.

b) Changing bed linens (bed covers, blankets, sheets, etc.) may require re-adjustment of the Safety Strap to eliminate a gap between the Bed Rail and side of the mattress.
c) If product is removed and reinstalled, Safety Strap needs to be reinstalled correctly as directed in these instructions.

5) AGREEMENT BETWEEN INSTALLER/USER(S) AND STANDER INC.:
a) If the installer/user(s) choose to use this product, it is understood between the installer/user(s) AND Stander Inc., that the installer/user(s) accept the risks associated with using this product. Since these conditions are subjective and Stander Inc. has no control over who chooses to use this product, the installer/user(s) agree to be liable for their decisions when using this product.

6) CONSUMER RIGHTS AND ARBITRATION AGREEMENT:
a) This arbitration agreement ("Agreement") affects your legal rights and remedies by providing that disputes between you and the manufacture of this product ("Stander"), must be resolved through binding arbitration, rather than in a court. Please read this agreement carefully as you accept the terms of this agreement by assembling and using this product. If you do not agree to the terms of this agreement, return the product to the location of purchase for a refund.
i) RESOLUTION OF CLAIMS OR DISPUTES. Any claim or dispute between you and Stander arising out of or relating in any way to the Product or this Agreement shall be resolved through final, binding arbitration. This arbitration obligation applies regardless of whether the claim or dispute involves a tort, fraud, misrepresentation, product liability, negligence, violation of a statute, or any other legal theory. Both you and Stander specifically acknowledge and agree that you waive your right to bring a lawsuit based on such claims or disputes and to have such lawsuit resolved by a judge or jury.
ii) LIMITATION OF LEGAL REMEDIES. All arbitrations under this Agreement shall be conducted only on an individual (and not a class-wide) basis and an arbitrator shall have no authority to award class-wide relief. You acknowledge and agree that this Agreement specifically prohibits you from commencing arbitration proceedings as a representative of others or joining in any arbitration proceedings brought by any other person.
iii) ARBITRATION PROCEDURES.
(1) Before commencing any arbitration proceedings under this Agreement, you must first present the claim/dispute to Stander by calling (800) 506-9901 or (435) 755-0453, providing requested contact information and allowing Stander the opportunity to resolve it. If your claim or dispute is not resolved within sixty (60) days, you may commence arbitration proceedings in accordance with the terms of this Agreement.
(2) The arbitration of claim(s)/dispute(s) under this Agreement shall be pursuant to the American Arbitration Association's ("AAA") United States Commercial Dispute Resolution Procedures and Supplementary Procedures for Consumer-Related Disputes (see www.adr.org for their rules and procedures).
(3) The arbitration of any claim/dispute under this Agreement shall be in the State of Utah.
(4) All administrative expenses of arbitration proceedings under this Agreement shall be divided equally between you and the Company, except that: (a) if the claims/dispute subject to the arbitration proceedings is less than ten thousand dollars (US$10,000), you will be responsible for no more than one hundred twenty-five dollars (US$125) in administrative expenses; (b) if the claim/dispute subject to the arbitration proceedings is more than ten thousand dollars (US$10,000) but less than seventy-five thousand dollars (US$75,000), then you will be responsible for no more than three hundred seventy-five dollars (US$375) in administrative expenses; and (c) if the claim/dispute subject to the arbitration proceedings is more than seventy-five thousand dollars (US$75,000), then you will be responsible for administrative expenses in accordance with the Commercial Fee Schedule provided by the AAA. You acknowledge and agree that each party shall pay the fees and costs of its own counsel, experts and witnesses.
iv) CHOICE OF LAW & SEVERABILITY. This Agreement shall be governed by the United States Federal Arbitration Act and the laws of the state of Utah. If any provision of this Agreement is declared or found to be unlawful, unenforceable or void, such provision will be ineffective only to the extent that it is found unlawful, unenforceable or void and the remainder shall remain fully enforceable.

⚠ WARNING
ENTRAPMENT AND FALL HAZARD

Gaps in and around this product can entrap and kill. People with Alzheimer's disease or dementia, or those who are sedated, confused, or frail, are at increased risk of entrapment. People attempting to climb over this product are at increased risk of injury or death from falls. Always make sure this product is properly secured to bed. If product can move away from bed or mattress, it can lead to entrapment and death.

⚠WARNING
SUFFOCATION AND STRANGULATION HAZARD

Gaps in and around this product can entrap and kill. People with Alzheimer's disease or dementia, or those who are sedated, confused, or frail, are at increased risk of entrapment.

- NEVER use unless product is tight against mattress, without gaps, and at least 12 ½" from headboard and footboard.
- NEVER use with children.
- NEVER use on toddler, bunk, water, or inflatable beds

EC REP
EMERGO EUROPE
Molenstraat 15
2513 BH, The Hague
The Netherlands
Tel: +31 (0)70 345 8570
Fax: +31 (0)70 346 7299

Instructions:

1. Remove all components from the box and verify all parts are included as shown in Figure 1.

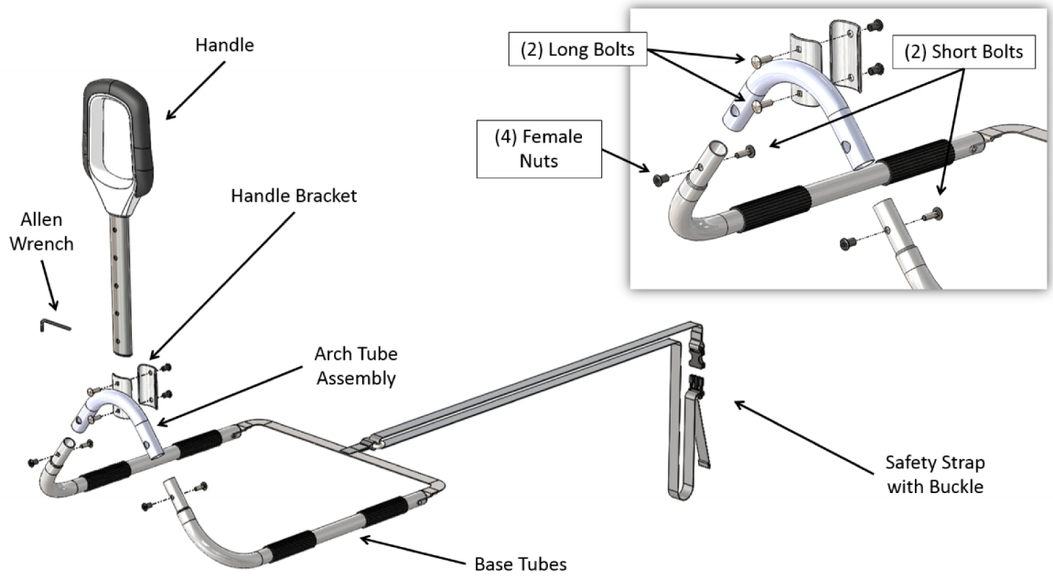

FIGURE 1

2. Attach the Arch Tube to the Base Tubes with Short Bolts and Female Nuts using the Allen Wrench, as shown in Figure 2.

   NOTE: The strap wire at the end of the Base Tubes should be oriented as shown in Figure 2.

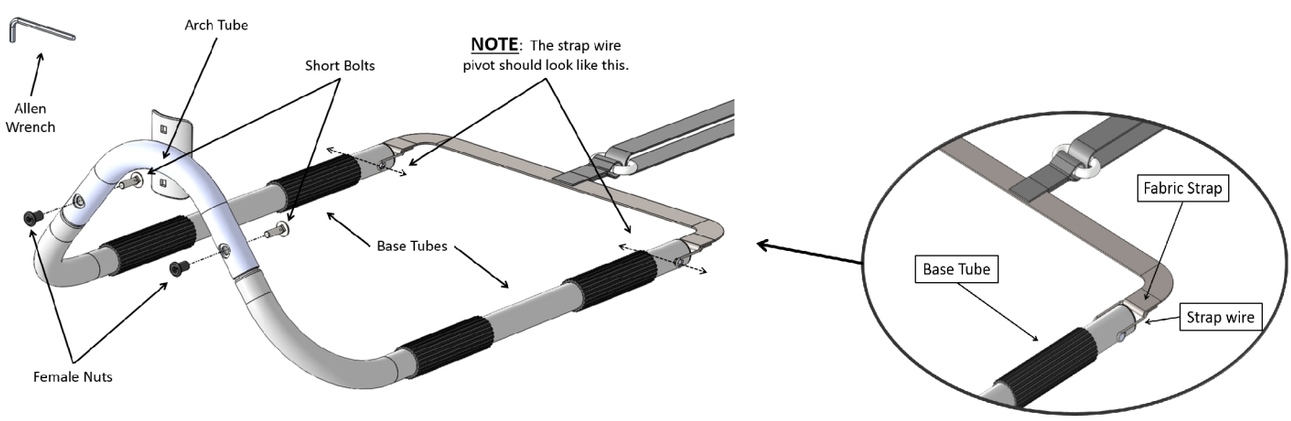

FIGURE 2

3. The Handle height adjustment holes allow the Handle to be positioned properly to accommodate varying mattress thicknesses (10 to 17 inches).

   The "Top of the Handle" must be installed at a position of 4 to 7 inches above the top of the Mattress and located 12.5 or more inches from the head end of the bed as shown in Figure 3.

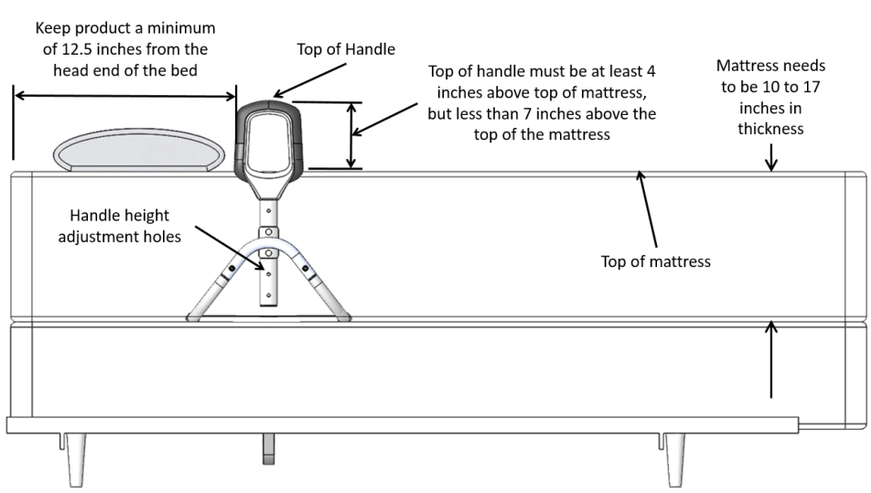

FIGURE 3

4. Determining the "Handle height adjustment holes" to use. Attach the Handle onto the Arch Tube with the Handle Bracket, Long Bolts, and Female Nuts using the included Allen Wrench as seen in Figure 4.

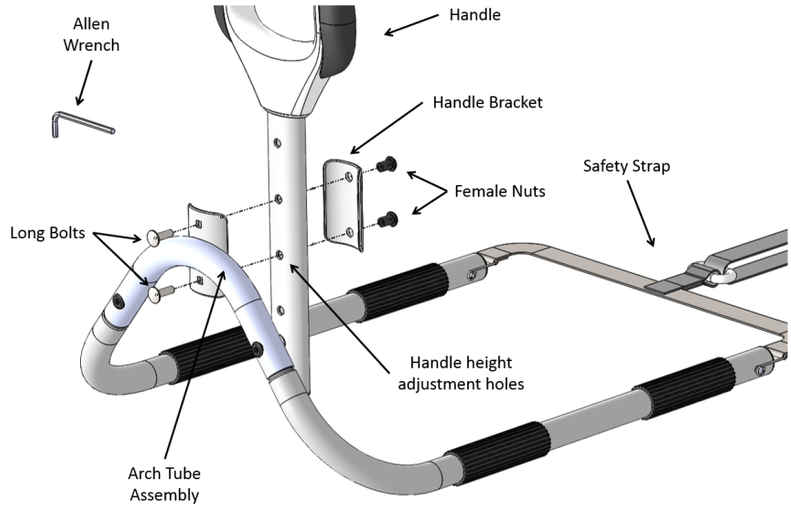

FIGURE 4

5. **Entrapment Warning:** Secure the SAFETY STRAP to the bed frame, as shown in Figure 5. Unbuckle strap and loop strap around bed frame and re-buckle. Tighten strap to secure Handle Assembly against the side of the mattress as shown in Figure 5. Product can be installed on either side of the bed; however the SAFETY STRAP must be placed between the mattress and box spring and secured to the opposite side of the bed frame.

   Do NOT install product without securing the SAFETY STRAP to the bed frame as shown in Figure 5. If you have any questions, call Stander at (800) 506-9901 or (435) 755-0453.

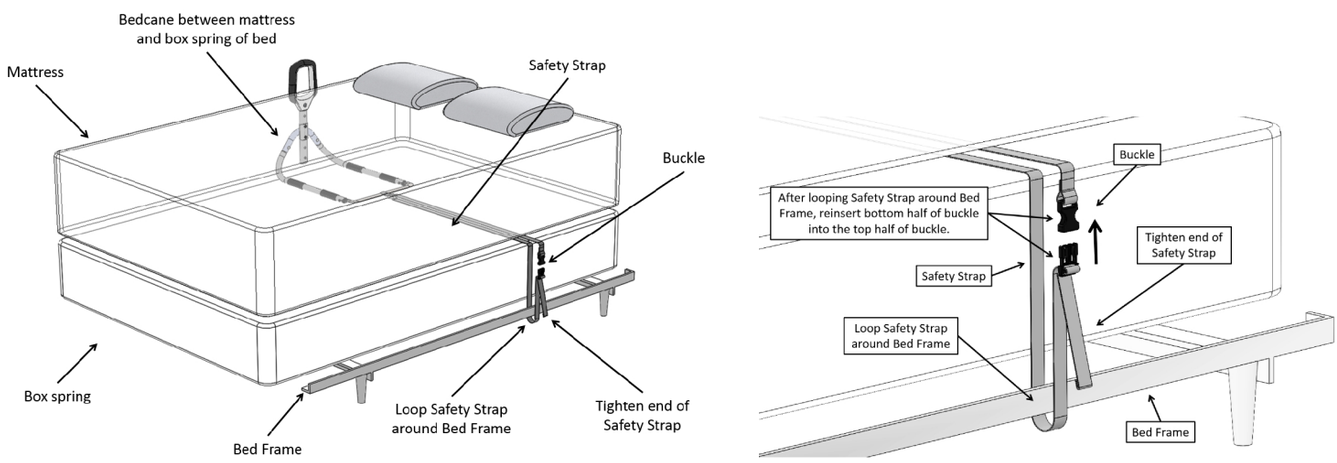

FIGURE 5

6. It is important that the Bedrail is secured to the Side of the mattress. The Safety Strap is looped around the Bed Frame on the opposite side of the bed, buckled, and tightened as show in Figure 6.

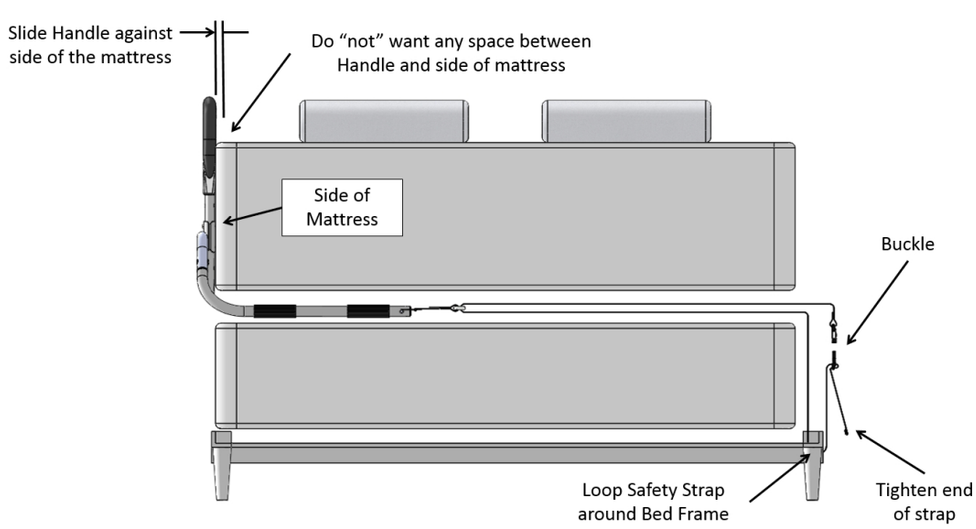

FIGURE 6